Jeide, Matthew 4/3/26

W18 CIM 2.3.6 [Part2] CAM Strategy Practice

Basic CAM Strategy	Tool Path	Simulation & Comparison	Browser Setup
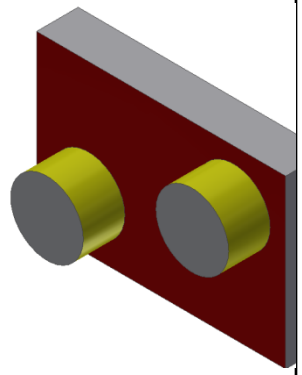 Example	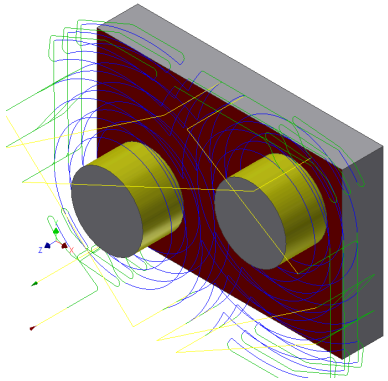	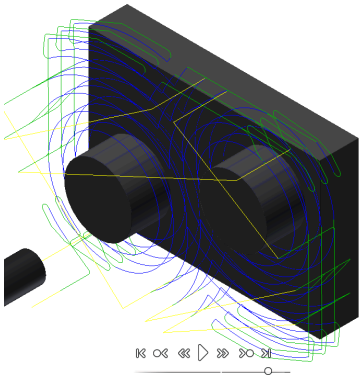	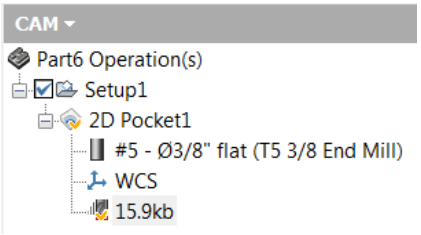

Basic CAM Strategy	Tool Path	Simulation & Comparison	Browser Setup
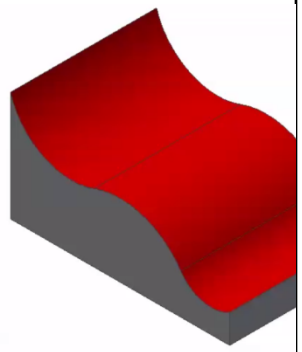 13. Simple Surfaces	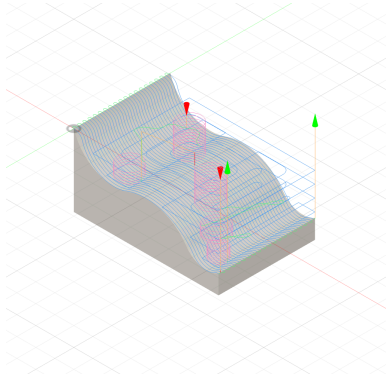	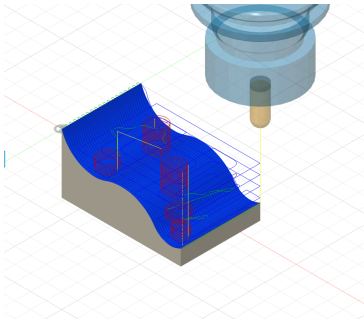	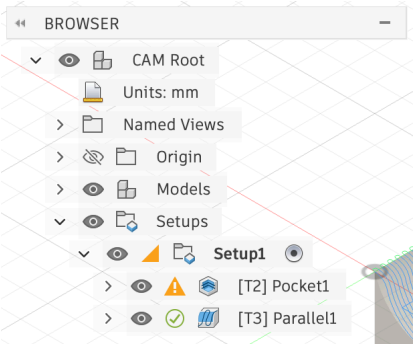

© 2021 Project Lead The Way, Inc.

Jeide, Matthew 4/3/26

Basic CAM Strategy	Tool Path	Simulation & Comparison	Browser Setup
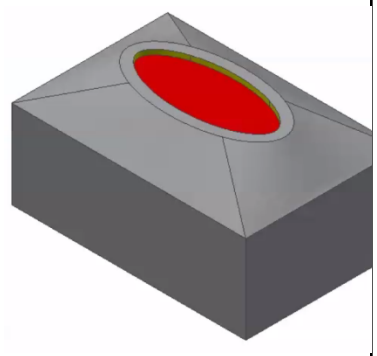 14. Complex Surfacing	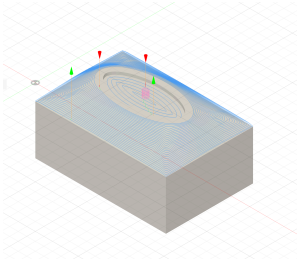	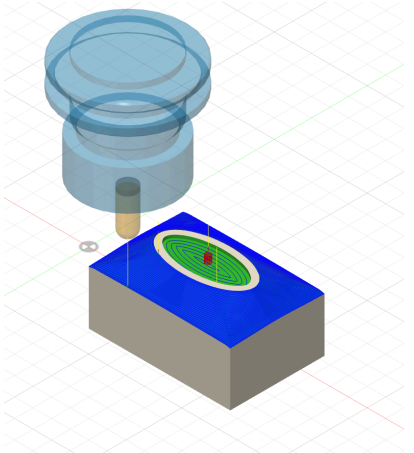	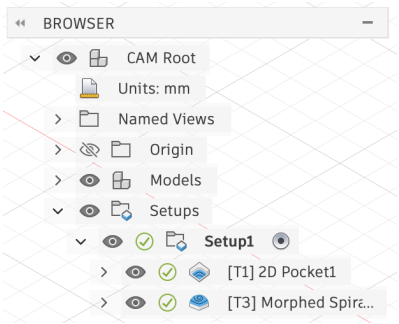

1. Simulate the **toolpaths** within the software and verify the machining accuracy with the part comparison option.
2. Generate the **NCcode**.
3. Verify the NC code in the CNC machine-specific software.
4. Save the NC code.

Conclusion Questions:

5. Describe considerations you could make while creating a CAD model, which will assist with the development of a CAM strategy.

One of the biggest considerations is the correct tool to use, certain tools are better for certain operations for others. For example, Ball-ends are more useful for round operations, while a flat end would not be useful.

6. How could you decrease machine time without changing the spindle speed or feed rates?

Change the size of your tool if possible; change stepover if possible to reduce unnecessary steps.

© 2021 Project Lead The Way, Inc.